Agilent 564 Ionization Gauge Tube

User Manual

Notices

Manual Part Number

699905564

Edition D.00, April 2022

Copyright

© Agilent Technologies, Inc. 2022

No part of this manual may be reproduced in any form or by any means (including electronic storage and retrieval or translation into a foreign language) without prior agreement and written consent from Agilent Technologies, Inc. as governed by United States and international copyright laws.

Agilent Technologies Italia S.p.A.
Vacuum Products Division
Via F.lli Varian, 54
10040 Leinì (TO)
ITALY

www.agilent.com

Instrument Manufacturing

Agilent Technologies LDA Malaysia
Sdn Bhd Bayan Lepas
Free Industrial Zone 11900 Bayan Lepas,
Penang Malaysia

Printed in Italy

Warranty

The material contained in this document is provided "as is," and is subject to being changed, without notice, in future editions. Further, to the maximum extent permitted by applicable law, Agilent disclaims all warranties, either express or implied, with regard to this manual and any information contained herein, including but not limited to the implied warranties of merchantability and fitness for a particular purpose. Agilent shall not be liable for errors or for incidental or consequential damages in connection with the furnishing, use, or performance of this document or of any information contained herein. Should Agilent and the user have a separate written agreement with warranty terms covering the material in this document that conflict with these terms, the warranty terms in the separate agreement shall control.

Technology Licenses

The hardware and/or software described in this document are furnished under a license and may be used or copied only in accordance with the terms of such license.

Restricted Rights Legend

U.S. Government Restricted Rights. Software and technical data rights granted to the federal government include only those rights customarily provided to end user customers. Agilent provides this customary commercial license in Software and technical data pursuant to FAR 12.211 (Technical Data) and 12.212 (Computer Software) and, for the Department of Defense, DFARS 252.227-7015 (Technical Data - Commercial Items) and DFARS 227.7202-3 (Rights in Commercial Computer Software or Computer Software Documentation).

Safety Notices

CAUTION

A **CAUTION** notice denotes a hazard. It calls attention to an operating procedure, practice, or the like that, if not correctly performed or adhered to, could result in damage to the product or loss of important data. Do not proceed beyond a **CAUTION** notice until the indicated conditions are fully understood and met.

WARNING

A **WARNING** notice denotes a hazard. It calls attention to an operating procedure, practice, or the like that, if not correctly performed or adhered to, could result in personal injury or death. Do not proceed beyond a WARNING notice until the indicated conditions are fully understood and met.

Contents

1 Instructions for Use 5
About this manual 6
Validity 6
Definitions and terminology 7
Definition of Caution, Warning and Note 7
Warning Symbols 8
Safety 10
Proper use 10
Improper use 11
Use with Combustibles and Mixtures 11
Vacuum Equipment Cleanliness 11
Disposal 12
Service 13

2 Technical Information 14
Description of the 564 Ionization Gauge 15
Electrical Connections 16
Operation 17
Sensitivity 17
Technical Specifications 18
Mounting 20
Use of The Gauge Tube 21
Degassing 21
X- ray Limit 22
Flange Availability 22
Gas Correction Factors 23

1 Instructions for Use

About this manual 6
Validity 6
Definitions and terminology 7
Definition of Caution, Warning and Note 7
Warning Symbols 8
Safety 10
Proper use 10
Improper use 11
Disposal 12
Service 12

About this manual

Validity

This manual lists the instructions for the users of the 564 Ionization Gauge Tube, with particular reference to the notions relating to safety, operation and first level maintenance, limited to maintenance operations for which the user is responsible.

The maintenance operations, illustrated in the specific sections, with specific provisions relating to the higher level of maintenance (personnel specifically trained for maintenance operations) must not be carried out by the user.

NOTE

1. This manual contains useful information so that all personnel using the 564 Ionization Gauge Tube can operate it safely and guarantee perfect efficiency, for its entire life span.
2. Keep this manual, together with all the related publications, in an accessible place known to all operators/maintenance personnel.

Definitions and terminology

Definition of Caution, Warning and Note

Some important references of this manual are highlighted and framed in contrasting color.

CAUTION

Caution messages are displayed before procedures which, if not observed, could cause damage to the equipment.

WARNING

Warning messages draw the operator's attention to a specific procedure or practice which, if not performed correctly, could result in serious personal injury.

NOTE

Notes are intended to call attention to important information and provide more detail regarding specific steps.

Warning Symbols

The following is a list of symbols that appear in conjunction with warnings on the 564 Ionization Gauge Tube. The hazard they describe is also shown.

A triangular symbol indicates a warning. The meanings of the symbols that may appear alongside warnings in the documentation are as follows:

Dangerous voltages

Hot surface

Generic hazard

Cutting hazard

European Declaration of Conformity

Waste Electrical and Electronic Equipment

Instructions for Use

The following symbol may be used on warning labels attached to the instrument. When you see this symbol, refer to the relevant operation or service manual for the correct procedure referred to by that warning label.

The following symbols appear on the instrument for your information.

	Production date
	Dangerous voltages
	Hot surfaces
	Generic hazard
CE	CE certification
	Waste Electrical and Electronic Equipment

Safety

This section contains the information, prescribed by the Low Voltage Directive 2014/35/EU, which is essential for the compliance and observance of the safety regulations both generally and in relation to the specific use of the product.

Failure to comply with these instructions and the other instructions contained in this manual may render the safety conditions envisaged in the design phase inefficient and cause accidents to those operating the product.

Agilent Technologies declines all responsibility for damage to the product or for the physical safety of the operator or third parties deriving from the non-observance of the safety rules indicated in the technical documentation.

Proper use

This manual contains important warnings and safety instructions to be observed in order for the unit to work safely.

The product described in this manual is intended exclusively for the area of application specified in the instructions. The manual also provides indications regarding the essential requirements for the application and operation of the product as well as the safety measures that can be adopted to guarantee regular operation. Agilent Technologies does not provide any guarantee or assume any responsibility for applications other than those described in this manual or in which the essential requirements and safety measures are not respected.

The product must only be used by qualified personnel who are able to take the necessary safety measures under conditions that do not cause damage or injury. Any accessories and equipment used with the product must be supplied or approved by Agilent Technologies.

Any adjustment or maintenance operation must be performed by a professional technician informed about the risks.

Repairs on the product must be carried out exclusively by Agilent authorized personnel.

Improper use

Agilent Technologies declines all responsibility, deriving from the improper use of the 564 Ionization Gauge Tube.

Improper use will cause all claims for liability and warranties to be forfeited.

Personnel responsible for pump operation and maintenance must be well-trained and must be aware of the accident prevention rules. The accident prevention precautions contained in this section must be continuously respected during operation and maintenance of the pump to avoid damage to operators and to the pump. These precautions are provided in the form of WARNING and CAUTION notes.

Use with Combustibles and Mixtures

WARNING

As with all ionization gauges, this device is not intrinsically safe. Exercise extreme care when using this vacuum gauge while pumping or backfilling a system or in any other system condition which contains combustible gases or mixtures. The filament of a hot filament ion gauge and the high voltage discharge of a cold cathode gauge can be ignition sources. When such a gas or mixture is present, do not turn on any such vacuum gauge.

Failure to follow this instruction could result in serious injury to personnel and damage to equipment.

Vacuum Equipment Cleanliness

Cleanliness is vital when servicing any vacuum equipment.

CAUTION

Do not use silicone oil or silicone grease.

Use powder-free butyl or polycarbonate gloves to prevent skin oils from getting on vacuum surfaces.

Do not clean any aluminum parts with Alconox®. Alconox is not compatible with aluminum and will cause damage

NOTE

Normally, it is unnecessary to use vacuum grease.

However, if it must be used, do not use silicone types, and use it sparingly. Apiezon® L grease is recommended (Agilent Part Number 695400004).

Disposal

Meaning of the "WEEE" logo found in labels.

The following symbol is applied in accordance with the EC WEEE (Waste Electrical and Electronic Equipment) Directive.

This symbol (valid only in countries of the European Community) indicates that the product it applies to must NOT be disposed of together with ordinary domestic or industrial waste but must be sent to a differentiated waste collection system. The end user is therefore invited to contact the supplier of the device, whether the Parent Company or a retailer, to initiate the collection and disposal process after checking the contractual terms and conditions of sale.

Figure 1 Logo "WEEE"

For more information refer to:

http://www.agilent.com/environment/product/index.shtml

Service

For service or troubleshooting of your ion gauge, please contact your local distributor or email:

vpt-customercare@agilent.com

vpl-customercare@agilent.com

Completion of the “Request for Return” form is required to return your product to Agilent for service (provided at the end of this manual).

2 Technical Information

Description of the 564 Ionization Gauge 15
Electrical Connections 16
Operation 17
Sensitivity 17
Technical Specifications 18
Mounting 20
Use of The Gauge Tube 21
Degassing 21
X- ray Limit 22
Flange Availability 22
Gas Correction Factors 23

Description of the 564 Ionization Gauge

The 564[1] Ionization Gauge Tube is a rugged and reliable bayard-alpert vacuum gauge with extended vacuum measurement range[2]. Careful adherence to manufacturing techniques and standards ensures close agreement between gauges. Initial calibration against closely checked McLeod gauge standards ensures repeatable measurements with different gauge tubes[2].

The 564 has high-pressure capability and a low X-ray limit, and thus the 564 tube is usable up to $1x10^{-1}$ Torr in argon and $6x10^{-2}$ Torr in air. This is accomplished by the smaller geometry of the tube elements and the use of a conductive platinum coating on the inside of the glass envelope which improves gauge tube performance.

In high and ultra-high vacuum ranges, a platinum shield prevents external electrical fields from affecting the low ion current. In higher pressure ranges where the number of ions produced is much greater, the platinum conductive coating drains off the static charge which can build up on the inside of the glass tube. Thus, the 564 tube gives superior performance in stressful environments.

It is important to understand the limitations of any ionization gauge for the longest service and most meaningful result.

WARNING

Check that your Ion Gauge Controller and vacuum system are separately grounded to a common ground.

Placement of a ground wire between the vacuum chamber and the controller chassis is not safe; large continuous currents could flow through it.

Personnel could be killed by high voltages (up to 1000 volts) which may be present in an improperly grounded system).

1. US Patent 3153744.
2. See: "A Detailed Examination of the Principles of Ion Calibration", W.B. Nottingham and F.L. Tomey, Jr. Vacuum Symposium Transactions, 1960, p.117.

Electrical Connections

Ensure that your vacuum system is grounded as shown in the following figure.

WARNING

Before proceeding, test the system ground to be sure that it is complete and capable of supporting at least 10A.

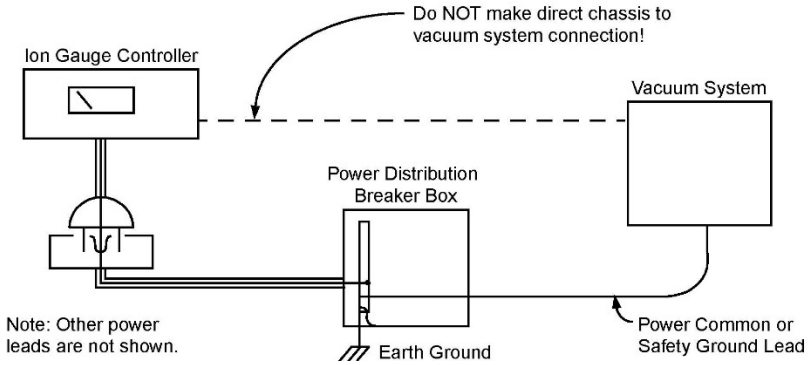

Figure 2 Electrical Connections

An independent agency has determined that all vacuum chambers, regardless of manufacture, can possibly become charged to lethal voltage levels under certain conditions if they are not grounded with a quality, common ground with the controller of their ionization tube.

WARNING

After each maintenance/service procedure and before operating the controller and vacuum system, verify the integrity of the ground of both units.

Equipment utilizing these controls should be designed to prevent personal contact with high voltages.

Always break the primary circuit when direct access to the control unit is required.

Operation

The 564 Ionization Gauge Tube can be used with a variety of commercial controls which are equipped for resistance degassing.

NOTE

It is important to use a proper gauge controller that does not limit the broad range of the gauge, or exceed any of the maximum ratings noted in this manual.

The thoria-coated iridium filament resists burnout from accidental exposure to atmosphere. When used in argon, the tube can operate continuously at $1x10^{-1}$ Torr with no effect on filament life. Tube life in air may be shortened above $1x10^{-3}$ Torr.

Sensitivity

The sensitivity of an ionization gauge is defined as the ion current per unit of pressure at a specified grid (electron) current. Since all ionization gauges are sensitive to the type and pressure of a gas, the gas composition must be known to correctly establish the pressure reading.
Table 1 gives the 564 Ionization Gauge Tube sensitivities for helium, nitrogen and air.

Table 1 Gas Sensitivity Parameters

Gas	Gauge Constant S $S = i^+/i^- \times 1/P$	Emission Setting for 0.01 Amp/Torr sensitivity (10 uA/micron)
Helium	1.5 per Torr	6.7 mA
Nitrogen	10 per Torr	1.0 mA
Air	10 per Torr	1.0 mA

where:

S = Sensitivity, $Torr^{-1}$
i^+ = Ion current, Amps
i^- = Grid (electron) current, Amps
P = Partial pressure of the gas, Torr

Technical Specifications

Table 2 Vacuum Specifications

Range	$1x10^{-1}$ to $4x10^{-10}$ Torr*
Maximum Operating Pressure	$1x10^{-1}$ Torr (argon); $6x7^{-2}$ Torr (air)
Pumping Speed, ionic	0.06 liters/sec (Nitrogen) (1mA)
X-ray Limit*	Approximately $4x10^{-10}$ Torr (Nitrogen)

* See Section "X-ray Limit"

** Calibration of production standards only

Table 3 Physical Specifications

Envelope	Nonex (all models)
Grid	Tungsten "Non-Sag", 0.025 inch diameter
Filament	Hairpin thoria-coated iridium
Collector	Tungsten, 0.010 inch diameter
Shield Coating	Platinum, internally connected to filament
Base Leads	Soft nickel, 0.060 inch diameter
Collector Lead	Soft nickel, 0.040 inch diameter
Shipping Weight	3 lbs. (6.6 kg)
Internal Volume	220 cc (not including tubulation)

Table 4 Operating Ratings

Collector	0 VDC (ground)*
Shield	Internally connected to filament
Grid	+180 VDC
Filament	+30 VDC
Filament Voltage	4.0 VAC
Filament Current	3.5 Amps AC (1 mA grid current)
Filament Voltage, absolute maximum	6.0 VAC
Filament Current, absolute maximum	6.0 Amps
Filament Temperature, absolute maximum	1400 °C

* Collector operated at ground potential through electrometer circuit to reduce noise pickup and leakage currents.

Table 5 Degassing Ratings

Resistance Heating*		Electron Bombardment	
Grid Voltage	6.3 VAC	Grid to Filament Voltage	+700 VDC
Grid Current	8.7 Amps	Grid Current	100 mA DC
Grid Temperature	1200 °C	Grid Temperature	1200 °C max
		Filament Temperature	1400 °C

* All values in the Resistance Heating column are absolute maximum ratings. If these values are exceeded, sagging of the grid can occur.

Mounting

The 564 Ionization Gauge Tube mounts in either a vertical or horizontal position and may be operated and degassed in either position for prolonged periods. An outline drawing of the tube is in the following figure.

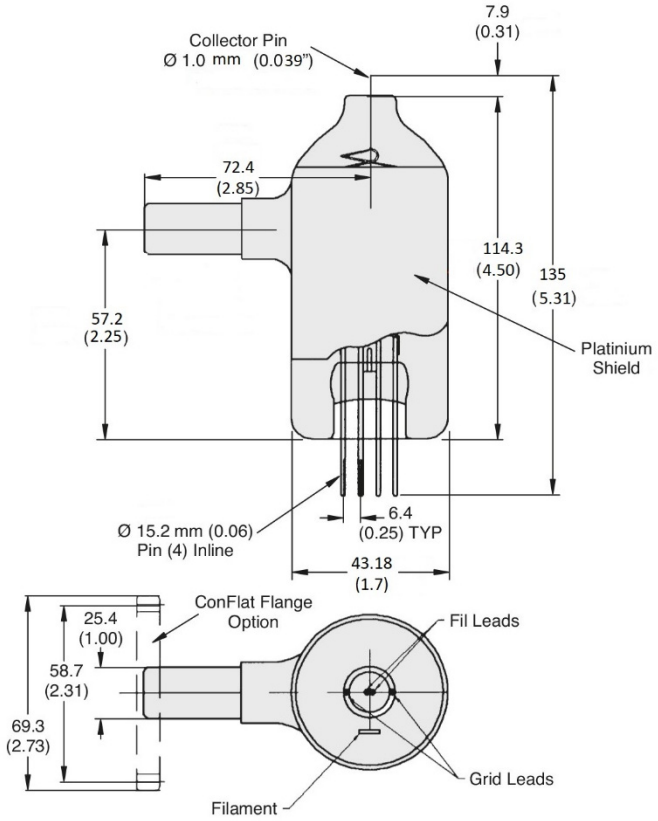

Dimensions: millimeters (inches)

Figure 3 564 Ionization Gauge Tube Outline Drawing

Any ionization gauge using a hot filament can show pronounced pumping (gauge pressure lower than system pressure) if the conductance of the pipe connecting it to the system is too low. In general, the gauge tube should be mounted as close as possible to the desired location through a large tubulation (1" OD recommended). This effect becomes of particular concern when pressures below 10^{-8} Torr are to be measured.

Use of The Gauge Tube

The 564 Ionization Gauge Tube may be used to measure equivalent pressures of gases from 10^{-1} Torr down to the X-ray limit of the gauge. All ionization gauges are composition-sensitive and pressure readings derived from these gauges can only be expressed in terms of equivalent pressure of one gas, usually nitrogen.

Because Bayard-Alpert gauges contain hot filaments, degassing of residual gases in the glass and metal parts of the gauge will occur from the time it is first turned on. It is, therefore, very important to keep the gauge as free from contaminating vapors as possible (diffusion pump fluids, mercury and water vapor, etc.).

High temperature baking of the gauge should not be attempted at pressures above 10^{-5} to avoid oxidation of the gauge elements which can make it very difficult to attain ultrahigh vacuum pressure readings. Conversely, ionization gauges cannot be expected to reach low ultimate pressure if the gauge and its connection are not thoroughly degassed.

Degassing

Degassing of the metal parts and glass walls of the gauge can be done by direct resistance heating of the grid or by electron bombardment of the grid by electrons supplied from the filaments of the gauge. In either case, it is important to use the values of grid voltage and current recommended to prevent damage to the gauge (see Table 5). The standard controls provide resistance degassing. In general, electron bombardment will result in a faster cleanup of a Bayard-Alpert gauge, but it must be carefully employed and watched to be efficient and non-hazardous to the gauge. Prolonged degassing at pressures above 10^{-7} Torr is usually unnecessary and of little value since the time to re-absorb common gases at this pressure is very short.

WARNING

If electron bombardment degassing is employed, high voltages (up to 700 VDC maximum) will be applied to the grid connections; such high voltages can kill. Observe all appropriate precautions.

Degassing the gauge by resistance heating will typically require one-half hour or more in the 10^{-9} Torr range depending on cleanliness of the vacuum system and its past history. Degassing should proceed until the pressure during degas has reached a peak, then dropped asymptotically to a lower equilibrium pressure. Allowing the gauge to degas overnight will usually insure this if pressures below 10^{-8} Torr are to be measured.

X- ray Limit

In ionization gauges, X-rays generated by the ionizing electrons hitting the grid produce a photoelectric emission at the ion collector. This causes a lower limit of pressure readings known as the X-ray limit (about $2x10^{-10}$ Torr in the 564 tube). Degassing effects of the gauges are often mistaken for the X-ray limit. Only careful investigation can determine which is the real cause. A second assumption often made is that the X-ray limit is always constant. Among other things, this limit depends on the photoelectric efficiency of the collector surface which, in turn, depends on the amount and type of absorbed gas, etc.

Therefore, as the X-ray limit is approached, readings should not be considered unequivocal.

Flange Availability

Table 6 Ordering Information

Part Number	Description
K2500301	564 Ion Gauge, 1 in Nonex tubulation
K2500302	564 Ion Gauge, 1 in Kovar tubulation
K2500303	564 Ion Gauge, 1 in Kovar tubulation, DN 35 CF-F (2.75 in CFF)
K2500304	564 Ion Gauge, 1 in Kovar tubulation, Dual Filament, DN 35 CF-F
K2500310	564 Ion Gauge, 1 in Kovar tubulation, NW25
K2500311	564 Ion Gauge, 1 in Kovar tubulation, NW40

Gas Correction Factors

Gas correction factor tables are only reproduced for the convenience of the user and do not imply that use with other gases will be safe with hot filament gauge controllers. Table 7 lists relative gauge gas correction factors for various gases. The values are derived by empirical methods substantiated by measurements reported in literature. This table was compiled and published by Robert L. Summers of Lewis Research Center, NASA Technical Note TND-5285, National Aeronautics and Space Administration, Washington, DC, June 1969.

Table 7 Gas Correction Factors

Substance	Formula	Relative Ionization Gauge Gas Correction Factor
Acetaldehyde	C_2H_4O	2.6
Acetone	$(CH_3)_2CO$	3.6 4.0 3.6
Acetylene	C_2H_2	1.9 2.0
Air		1.0 0.98
Ammonia	NH_3	1.3 1.2 1.3
Amylene:		
ISO·	ISO·C_5H_{10}	5.9
cyclo·	CY·C_5H_{10}	5.8
Argon	Ar	1.3 1.1 1.2 0.9
Benzene	C_6H_6	5.9 5.8 5.7 5.9 6.0
Benzoic Acid	C_6H_5COOH	5.5
Bromine	Br	3.8
Bromomethane	CH_3Br	3.7
Butane:		
n·	n·C_4H_{10}	4.9 4.7
ISO·	ISO·C_4H_{10}	4.6 4.9
Cadmium	Cd	2.3 3.4
Carbon Dioxide	CO_2	1.4 1.4 1.5 1.5 1.4

Substance	Formula	Relative Ionization Gauge Gas Correction Factor
Carbon Disulfide	CS_2	5.0 4.7 4.8
Carbon Monoxide	CO	1.05 1.05 1.1
Carbon Tetrachloride	CCl_4	6.0 6.3
Cesium	Cs	4.3 2.0 4.8
Chlorine	Cl_2	0.68 2.6 1.6
Chlorobenzene	C_6H_5Cl	7.0
Chloroethane	C_2H_5Cl	4.0
Chloroform	$CHCl_3$	4.7 4.8 4.8
Chloromethane	CH_3Cl	2.6 3.2 3.1
Cyanogen	$(CN)_2$	2.8 3.6 2.7
Cyclohexylene	C_6H_{12}	7.9 6.4
Deuterium	D_2	0.35 0.38
Dichlorodifloromethane	CCl_2F_2	2.7 4.1
Dichloromethane	CH_2Cl_2	3.7
Dinitrobenzene	$C_6H_4(NO_2)_2$	
o·		7.8
m·		7.8
p·		7.6
Ethane	C_2H_6	2.6 2.8 2.5
Ethanol	C_2H_5OH	3.6 2.9
Ethyl Acetate	$CH_3COOC_2H_5$	5.0

Table 2 Gas Correction Factors, continued

Substance	Formula	Relative Ionization Gauge Gas Correction F5tor
Ethyl ether	$(C_2H_5)_2O$	5.1 5.1
Ethylene	C_2H_4	2.3 2.4 2.2 2.2 to 2.5
Ethylene oxide	$(CH_2)_2O$	2.5
Helium	He	0.18 0.15 0.13 0.12
Heptane	C_7H_{16}	8.6
Hexadiene: 1.5· cyclo·	 $1.5{\cdot}C_5H_{10}$ $CY{\cdot}C_6H_{10}$	 6.4 6.0
Hexane	C_6H_{14}	6.6
Hexene: 1· cyclo	 $1{\cdot}C_6H_{12}$ $CY{\cdot}C_6H_{10}$	 5.9 6.4
Hydrogen	H_2	0.46 0.38 0.41 0.45 0.44
Hydrogen Bromide	HBr	2.0
Hydrogen Chloride	HCl	1.5 1.6 2.0 1.5
Hydrogen Cyanide	HCN	1.5 1.6
Hydrogen Floride	HF	1.4
Hydrogen Iodide	HI	3.1
Hydrogen Sulfide	H_2S	2.2 2.2 2.3 2.1
Iodine	I_2	5.4
Iodomethane	CH_3I	4.2
Isoamyl Alcohol	$C_5H_{11}OH$	2.9
Isobutylene	C_4H_8	3.6
Krypton	Kr	1.9 1.7 1.7
Lithium	Li	1.9
Mercury	Hg	3.6
Methane	CH_4	1.4 1.5 1.6 1.4 to 1.8 1.5 1.5
Methanol	CH_3OH	1.8 1.9
Mehtyl Acetate	CH_3COOCH_3	4.0
Mythyl ether	$(CH_3)_2O$	3.0 3.0

Substance	Formula	Relative Ionization Gauge Gas Correction Factor
Naphthalene	$C_{10}H_8$	9.7
Neon	Ne	0.30 0.31
Nitrobenzene	$C_6H_5NO_2$	7.2
Nitrogen	N_2	1.0
Nitrotoluene (o·, m·, p·)	$C_6H_4CH_3NO_2$	8.5
Nitric Oxide	NO	1.3 1.2 1.0
Nitrous Oxide	N_2O	1.5 1.7 1.7 1.3 to 2.1
Oxygen	O_2	1.0 1.1 0.9 0.9
Pentane n· ISO· neo·	 $n{\cdot}C_5H_{17}$ $ISO{\cdot}C_5H_{17}$ $(CH_3)_4C$	 6.2 6.0 5.7 6.0 5.7
Phenol	C_6H_5OH	6.2
Phosphine	PH_3	2.6
Potassium	K	3.6
Propane	C_3H_8	4.2 3.7 3.7 to 3.9 3.6
Propene oxide	C_3H_6O	3.9
Propene: n· cyclo·	 $n{\cdot}C_3H_6$ $cy{\cdot}C_3H_6$	 3.3 3.2 to 3.7 3.6
Rubidum	Rb	4.3
Silver perchlorate	$AgClO_4$	3.6
Sodium	Na	3.0
Stannic iodide	SnI_4	6.7
Sulphur Dioxide	SO_2	2.1 2.3
Sulphur Hexafloride	SF_6	2.3 2.8
Toluene	$C_6H_5CH_3$	6.8
Trinitrobenzene	$C_6H_3(NO_2)_3$	9.0
Water	H_2O	1.1 1.0 0.8
Xenon	Xe	2.9 2.2 2.4
Xylene: o· p·	 $o{\cdot}C_6H_4(CH_3)_2$ $p{\cdot}C_6H_4(CH_3)_2$	 7.8 7.9

Agilent Technologies

Vacuum Products Division

Dear Customer,

Thank you for purchasing an Agilent vacuum product. At Agilent Vacuum Products Division we make every effort to ensure that you will be satisfied with the product and/or service you have purchased.

As part of our Continuous Improvement effort, we ask that you report to us any problem you may have had with the purchase or operation of our products. On the back side you find a Corrective Action request form that you may fill out in the first part and return to us.

This form is intended to supplement normal lines of communications and to resolve problems that existing systems are not addressing in an adequate or timely manner.

Upon receipt of your Corrective Action Request we will determine the Root Cause of the problem and take the necessary actions to eliminate it. You will be contacted by one of our employees who will review the problem with you and update you, with the second part of the same form, on our actions.

Your business is very important to us. Please, take the time and let us know how we can improve.

Sincerely.

Giampaolo LEVI

Vice President and General Manager
Agilent Vacuum Products Division

Note: Fax or mail the Customer Request for Action (see backside page) to Agilent Vacuum Products Division (Torino) – Quality Assurance or to your nearest Agilent representative for onward transmission to the same address.

CUSTOMER REQUEST FOR CORRECTIVE / PREVENTIVE / IMPROVEMENT ACTION

TO: AGILENT VACUUM PRODUCTS DIVISION TORINO – QUALITY ASSURANCE FAX

N°: XXXX-011-9979350

ADDRESS: AGILENT TECHNOLOGIES ITALIA S.p.A. – Vacuum Products Division –

Via F.lli Varian, 54 – 10040 Leinì (TO) – Italy

E-MAIL: vpd-qualityassurance_pdl-ext@agilent.com

NAME	COMPANY	FUNCTION
ADDRESS: TEL. N° : FAX N° : E-MAIL:		
PROBLEM / SUGGESTION : REFERENCE INFORMATION (model n°, serial n°, ordering information, time to failure after installation, etc.): DATE		
CORRECTIVE ACTION PLAN / ACTUATION (by AGILENT VPD)	LOG N°	

XXX = Code for dialing Italy from your country (es. 01139 from USA; 00139 from Japan, etc.)

Agilent Technologies

Agilent Technologies

Vacuum Products Division
Instructions for returning products

Dear Customer,

Please follow these instructions whenever one of our products needs to be returned.

Complete the attached **Request for Return form** and send it to Agilent Technologies (see below), taking particular care to include the completed **Health and Safety** declaration Section. No work can be started on your unit until we receive a completed copy of this form.
After evaluating the information, Agilent Technologies will provide you with a **Return Authorization (RA) number** via email or fax, as requested. Note: Depending on the type of return, a Purchase Order may be required at the time **the Request for Return is submitted**. We will quote any necessary services (evaluation, repair, special cleaning, eg).

Product preparation

- Remove all accessories from the core product (e.g. inlet screens, vent valves).
- Prior to shipment and if applicable for your product, drain any oils or other liquids, purge or flush all gasses, and wipe off any excess residue.
- If ordering an Advance Exchange product, please use the packaging from the Advance Exchange to return the defective product.
- Seal the product in a plastic bag, and package product carefully to avoid damage in transit. You are responsible for loss or damage in transit.
- Include a copy of the Health and Safety Declaration in the shipping documentation on the outside of the shipping box of your returning product.
- Clearly label package with RA number. Using the shipping label provided will ensure the proper address and RA number are on the package. Packages shipped to Agilent without a RA clearly written on the outside cannot be accepted and will be returned.
- Return only products for which the RA was issued.

Shipping

- Ship to the location specified on the printable label, which will be sent, along with the RA number, as soon as we have received all of the required information. Customer is responsible for freight charges on returning product.
- Return shipments must comply with all applicable Shipping Regulations (IATA, DOT, ADR, etc.) and carrier requirements.

RETURN THE COMPLETED **REQUEST FOR RETURN** FORM TO YOUR NEAREST LOCATION:

EUROPE:
Fax: 00 39 011 9979 330
Fax Free: 00 800 345 345 00
Toll Free: 00 800 234 234 00
vpt-customercare@agilent.com

NORTH AMERICA:
Fax: 1 781 860 9252
Toll Free: 800 882 7426
vpl-ra@agilent.com

PACIFIC RIM:
please visit our website for individual office information
http://www.agilent.com

TERMS AND CONDITIONS

Please read the terms and conditions below as they apply to all returns and are in addition to the Agilent Technologies Vacuum Product Division – Products and Services Terms of Sale.

- Unless otherwise pre-negotiated, customer is responsible for the freight charges for the returning product. Return shipments must comply with all applicable Shipping Regulations (IATA, DOT, etc.) and carrier requirements.
- Agilent Technologies is not responsible for returning customer provided packaging or containers.
- Customers receiving an Advance Exchange product agree to return the defective, rebuildable part to Agilent Technologies within 15 business days. Failure to do so, or returning a non-rebuildable part (crashed), will result in an invoice for the non-returned/non-rebuildable part.
- Returns for credit toward the purchase of new or refurbished Products are subject to prior Agilent approval and may incur a restocking fee. Please reference the original purchase order number.
- Units returned for evaluation will be evaluated, and a quote for repair will be issued. If you choose to have the unit repaired, the cost of the evaluation will be deducted from the final repair pricing. A Purchase Order for the final repair price should be issued within 3 weeks of quotation date. Units without a Purchase Order for repair will be returned to the customer, and the evaluation fee will be invoiced.
- Products returned that have not been drained from oil will be disposed.
- A Special Cleaning fee will apply to all exposed products
- If requesting a calibration service, units must be functionally capable of being calibrated.

Agilent Technologies

Vacuum Products Division
Request for Return Form

Customer information		
Company :	Contact Name:	
Address:	Tel:	Fax:
	Email:	

Equipment			
Product description	Agilent PartNo	Agilent Serial No	Original Purchasing Reference
Failure description		Type of process (for which the equipment was used)	

Type of return

☐ Non Billable ☐ Billable ➡ New PO # (hard copy must be submitted with this form): _____

☐ Exchange ☐ Repair ☐ Upgrade ☐ Consignment/Demo ☐ Calibration ☐ Evaluation ☐ Return for Credit

Health and safety

The product has been exposed to the following substances:
(by selecting 'YES' you MUST complete the table to the right)

Substances (please refer to MSDS forms)

* Agilent will not accept delivery of any product that is exposed to radioactive, biological, explosive substances or dioxins, PCB's without written evidence of decontamination.

		Trade name	Chemical name	Chemical Symbol	CAS Number
Toxic	☐ YES ☐ NO				
Harmful	☐ YES ☐ NO				
Corrosive	☐ YES ☐ NO				
Reactive	☐ YES ☐ NO				
Flammable	☐ YES ☐ NO				
Explosive (*)	☐ YES ☐ NO				
Radioactive (*)	☐ YES ☐ NO				
Biological (*)	☐ YES ☐ NO				
Oxidizing	☐ YES ☐ NO				
Sensitizer	☐ YES ☐ NO				
Other dangerous substances	☐ YES ☐ NO				

Goods preparation

If you have replied YES to one of the above questions. Has the product been purged? ☐ YES ☐ NO
If yes, which cleaning agent/method:

Has the product been drained from oil? ☐ YES ☐ NOT APPLICABLE
I confirm to place this declaration on the outside of the shipping box. ☐

I declare that the above information is true and complete to the best of my knowledge and belief.
I understand and agree to the terms and conditions on page 2 of this document.

Name:	Authorized Signature:
Position:	
Date:	

NOTE: If a product is received at Agilent which is contaminated with a toxic or hazardous material that was not disclosed, **the customer will be held responsible** for all costs incurred to ensure the safe handling of the product, and is liable for any harm or injury to Agilent employees as well as to any third party occurring as a result of exposure to toxic or hazardous materials present in the product.

Agilent Vacuum Products Division/Sales and Service Offices

United States
Agilent Technologies
121 Hartwell Avenue
Lexington, MA 02421 - USA
Ph. +1 781 861 7200
Fax: +1 781 860 5437
Toll-Free: +1 800 882 7426
vpl-customercare@agilent.com

Netherlands
Agilent Technologies Netherlands B.V.
Customer Contact Center
Laan van Langerhuize 1, toren A-8
1186 DS Amstelveen
Tel. +31 020 547 2600
Fax +31 020 654 5748
customercare_netherlands@agilent.com

Belgium
Agilent Technologies Belgium S.A./N.V.
Customer Contact Center
Pegasus Park
De Kleetlaan 12A bus 12
B-1831 Diegem
Tel. +32 2 404 92 22
Fax +32 2 626 46 30
customercare_belgium@agilent.com

Brazil
Agilent Technologies Brasil
Avenida Marcos Penteado de Ulhoa
Rodrigues, 939 - 6° andar
Castelo Branco Office Park
Torre Jacarandá - Tamboré
Barueri, Sao Paulo CEP: 06460-040
Toll free: 0800 728 1405

China
Agilent Technologies (China) Co. Ltd
No.3, Wang Jing Bei Lu, Chao Yang District
Beijing, 100102, China
Tel: +86 (0)10 64397888
Fax: +86 (0)10 64392765
Toll free: 400 8206778 (mobile)
Toll free: 800 8206778 (landline)
vacuum.cnmarketing@agilent.com
vpc-customerservice@agilent.com

France
Agilent Technologies
Parc Technopolis - Z.A. de Courtaboeuf
3, avenue du Canada - CS 90263
91978 Les Ulis cedex, France
Tel: +33 (0) 1 64 53 61 15
Fax: +33 (0) 1 64 53 50 01
vpf.sales@agilent.com

Southeast Asia
Agilent Technologies Sales Sdn Bhd
Unit 201, Level 2 uptown 2,
2 Jalan SS21/37, Damansara Uptown
47400 Petaling Jaya, Selangor, Malaysia
Ph. +603 7712 6181
Fax: +603 7727 1239
Toll free: 1 800 880 805
vps-customerservice@agilent.com

India (Sales)
Agilent Technologies India Pvt. Ltd.
Unit Nos 110- 116, & Part of 101 & 109
First Floor, Splendor Forum,
Plot No.-3 , District Centre, Jasola
New Delhi-110025
Ph. +91 11 4623 7100
Fax: +91 4623 7105
Toll Free: 1 800 180 1517

Italy
Agilent Technologies Italia S.p.A.
Via F.lli Varian, 54
10040 Leini, (Torino) - Italy
Tel: +39 011 9979 111
Fax: +39 011 9979 350
Toll free: 00 800 234 234 00
vpt-customerservice@agilent.com

Japan
Agilent Technologies Japan, Ltd.
9-1 Takakura-cho Hachioji-city,
Tokyo, Japan
Tel.: +81- 3-5232-1253
Fax: +81-120-565-154
Toll-Free: +81-120-477-111
jp-vvt-sales.pdl-ext@agilent.com

Singapore
Agilent Technologies Singapore Pte. Ltd,
1 Yishun Avenue 7,
Singapore 768923
Tel : (65) 6215 8045
Fax : (65) 6754 0574
Toll free: 1 800 2762622
vps-customerservice@agilent.com

Korea
Agilent Technologies Korea, Ltd.
Ilshin Builiding 4F
Yongsan-gu Hannam-daero
Seoul Korea 04418
Tel: +82 (0)2 2194 9449
Fax: +82 (0)2 2194 9853
Toll free: 080 222 2452
vpk-customerservice@agilent.com

UK and Ireland
Agilent Technologies LDA UK Limited
Lakeside Cheadle Royal Business Park
Cheadle, Cheshire SK8 3GR,
United Kingdom
Ph. +44 01865291570
Fax +44 01865291571
Toll free: 00 800 234 234 00
Toll free fax: 00 800 345 345 00
vpt-customercare@agilent.com

© Agilent Technologies, Inc. 2021
02/2021

India (Service)
Agilent Technologies India Pvt. Ltd.
C-Block, RMZ Centennial Plot Number- 8A, 8B, 8C, 8D,
Doddanakundi Industrial Area, ITPL Road,
Mahadevapura Post, Bangalore- 560048
Ph. +91 80 40614000
Fax: +91 80 40148991

Taiwan
Agilent Technologies Taiwan Limited
No. 20 Gao-shuang Road, Ping-zhen Dist
Tao-Yuan City
32450 Taiwan, R.O.C.
Tel: +886 3 4959004
Toll free: 0800 018 768
vpw-customerservice@agilent.com

Germany and Austria
Agilent Technologies
Sales & Services GmbH & Co. KG
Lyoner Str. 20
60 528 Frankfurt am Main
GERMANY
Tel: +49 69 6773 43 2230
Fax: +49 69 6773 43 2250

Mexico
Agilent Technologies
Concepcion Beistegui No 109
Col Del Valle
C.P. 03100 – Mexico, D.F.
Tel.: +52 5 523 9465
Fax: +52 5 523 9472

Other Countries
Agilent Technologies Italia S.p.A.
Via F.lli Varian, 54
10040 Leini, (Torino) - Italy
Tel.: +39 011 997 9111
Fax: +39 011 997 9350
Toll-Free: 00 800 234 234 00
vpt-customercare@agilent.com

Customer Support & Service
NORTH AMERICA:
Toll Free: 800 882 7426
vpl-ra@agilent.com
Lexington-service@agilent.com

EUROPE:
Toll Free: 00 800 234 234 00
vpt-customercare@agilent.com

PACIFIC RIM:
please visit our website for individual office information
http://www.agilent.com/chem/vacuum

Worldwide Web Site, Catalog and Order On-line:
www.agilent.com/chem/vacuum
Representatives in most countries

Agilent Technologies

In This Book

The manual describes the following:

- Contents
- Technical information

www.agilent.com

© Agilent Technologies, Inc. 2022

Edition D.00, 04/22

699905564